版本号	日期	修订记录	版本号	日期	修订记录
Rev-4.0	2019/4/28	原理图模板变更			

Acela Micro 苏州迅芯微电子有限公司

Project Title: AAD06S032GEVM	
Sheet Title: 1	
Size: A3	Revision: Rev-4.0
DrawnBy: QXL	CheckedBy: ZL
Sheet 1 of 4	Date: 2019/4/28

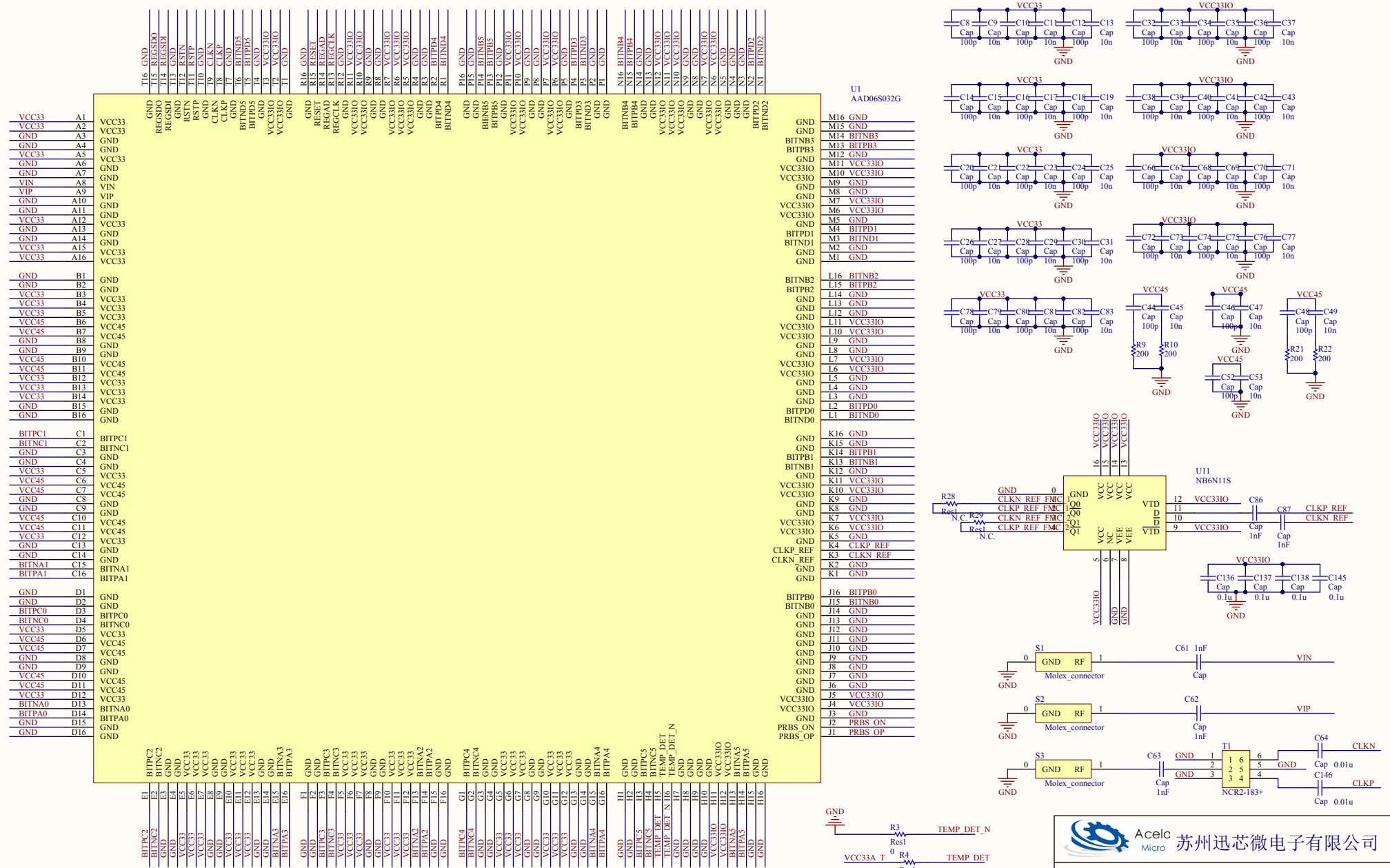

Acela Micro 苏州迅芯微电子有限公司

Project Title: AAD06S032GEVM	
Sheet Title: AAD06S032G	
Size: A3	Revision: Rev-4.0
DrawnBy: QXL	CheckedBy: ZL
Sheet 2 of 4	Date: 2019/4/28

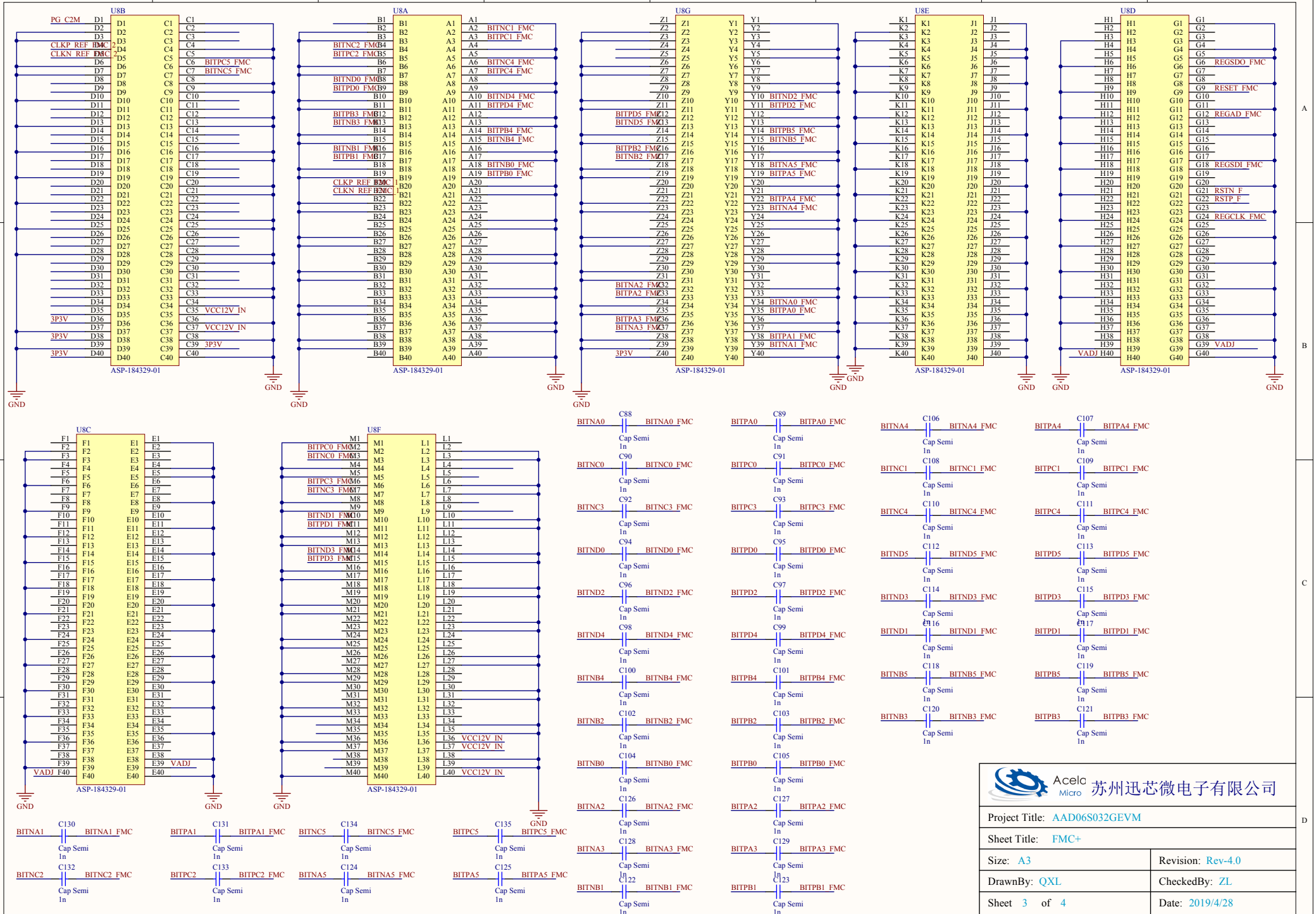

Project Title: AAD06S032GEVM	
Sheet Title: FMC+	
Size: A3	Revision: Rev-4.0
DrawnBy: QXL	CheckedBy: ZL
Sheet 3 of 4	Date: 2019/4/28

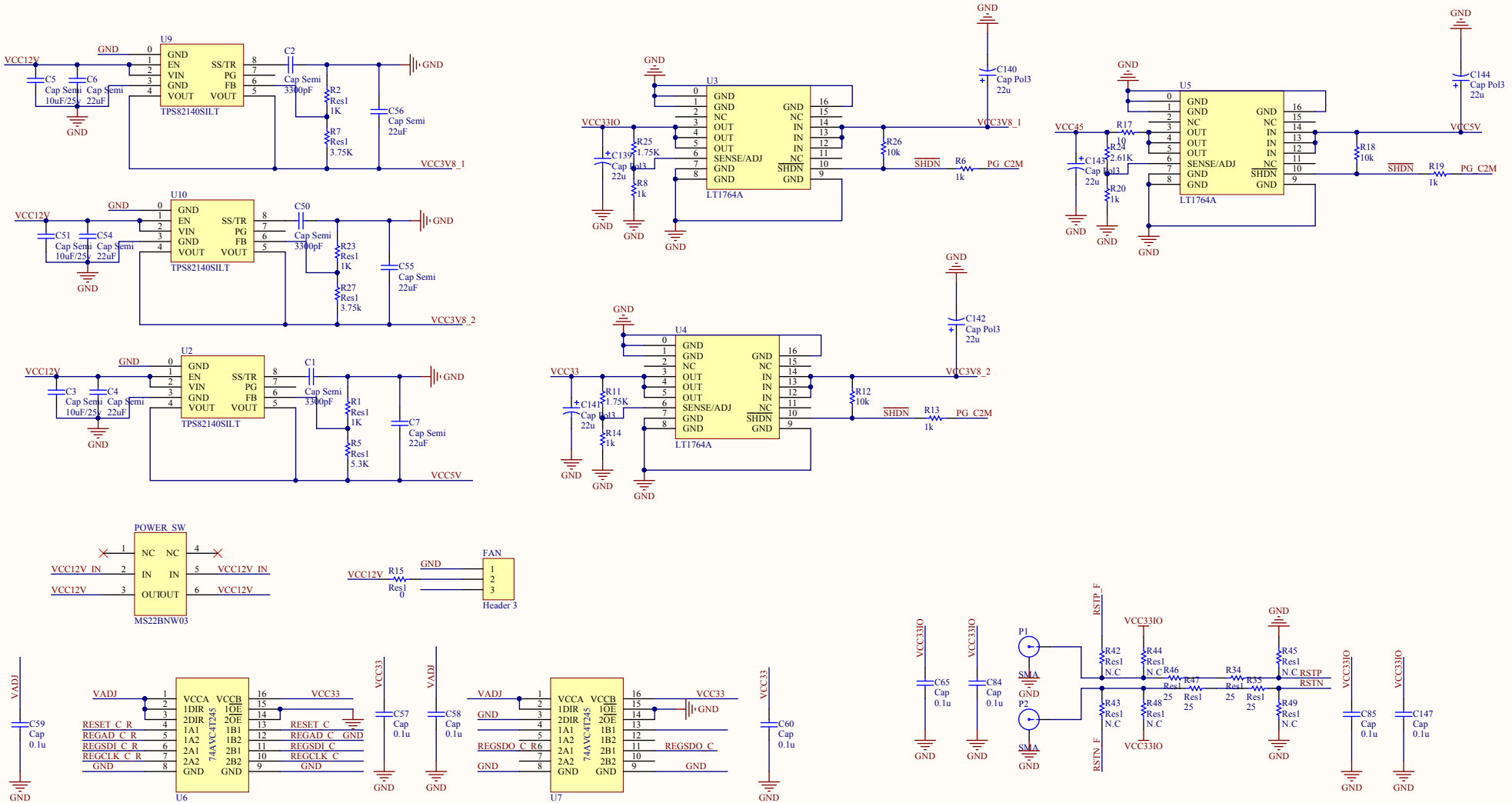

Acela Micro 苏州迅芯微电子有限公司

Project Title: AAD06S032GEVM	
Sheet Title: POWER SUPPLY	
Size: A3	Revision: Rev-4.0
DrawnBy: QXL	CheckedBy: ZL
Sheet 4 of 4	Date: 2019/4/28